ASSAMBLING INSTRUCTION

Range No	: MB 034
Description	: BEDSTEAD

STEP 1

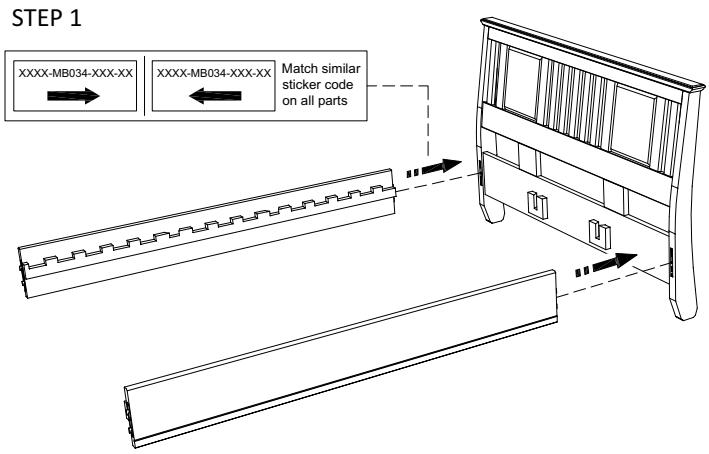

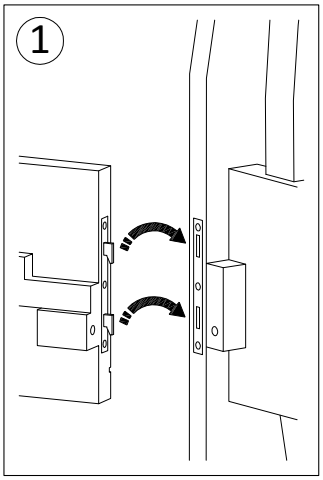

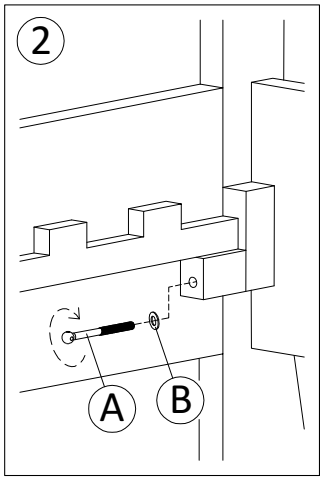

STEP 2

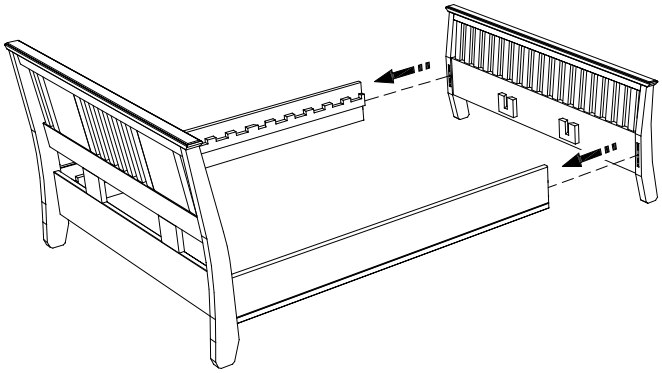

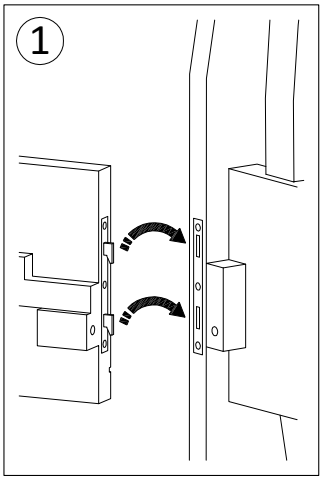

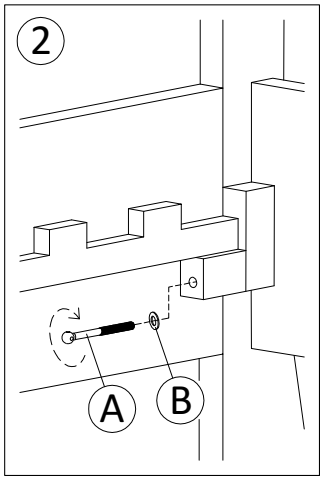

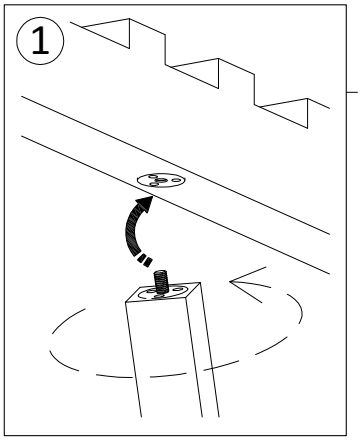

STEP 3

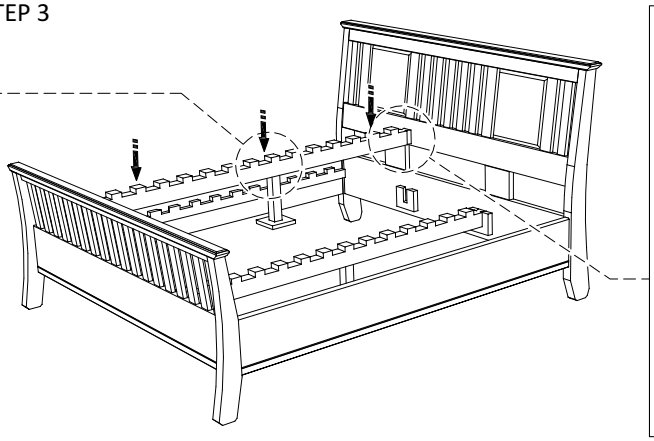

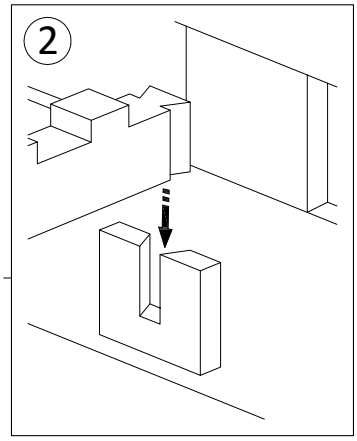

STEP 4

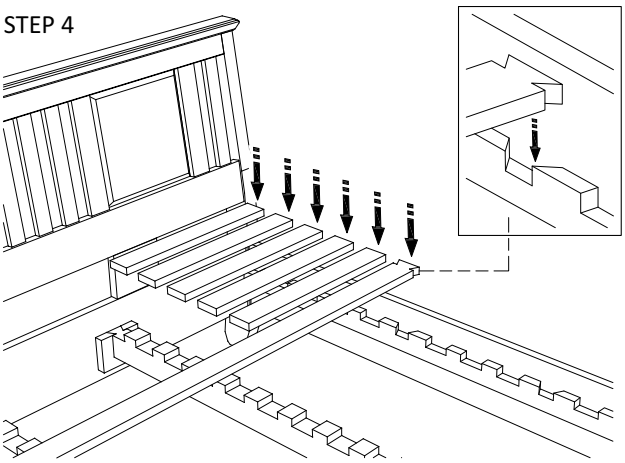

READY

HARDWARE

BED FITTING	WASHER	ALLEN KEY 4
		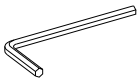
A = M8 x 10cm = 4 pcs	B = Ø10mm = 4 pcs	1 pcs

ASSAMBLING INSTRUCTION

Range No	: MB 036
Description	: BEDSTEAD

STEP 1

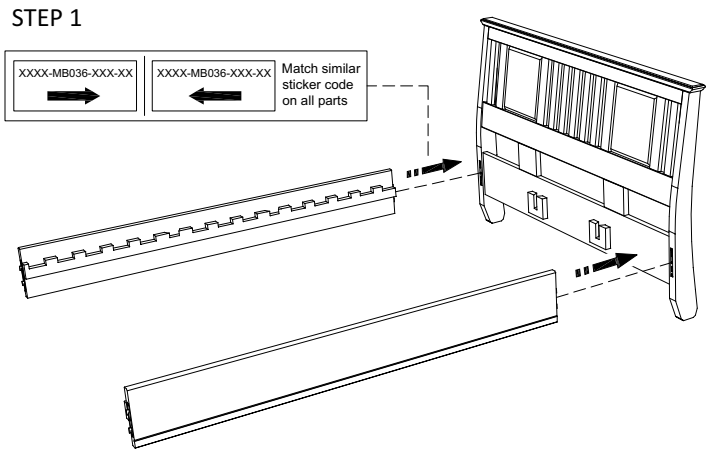

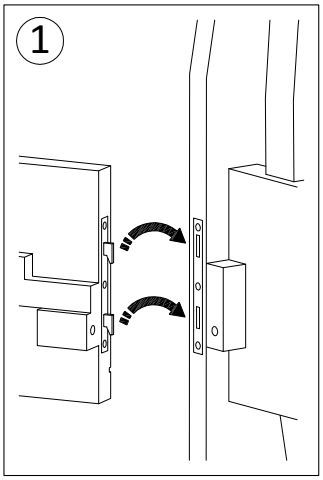

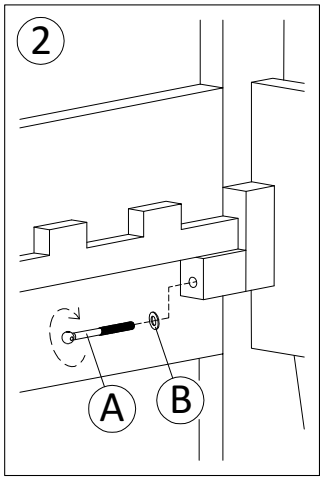

STEP 2

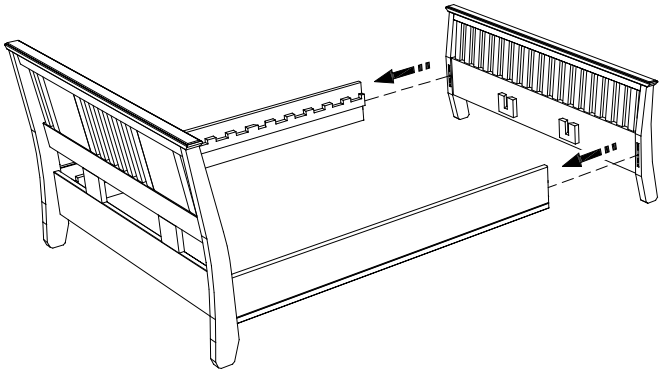

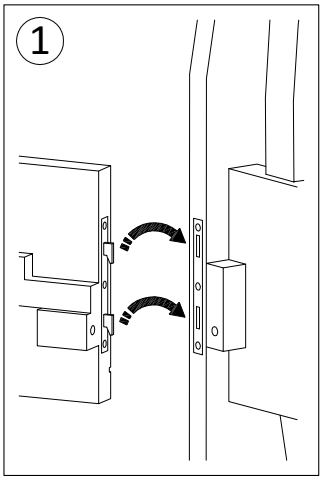

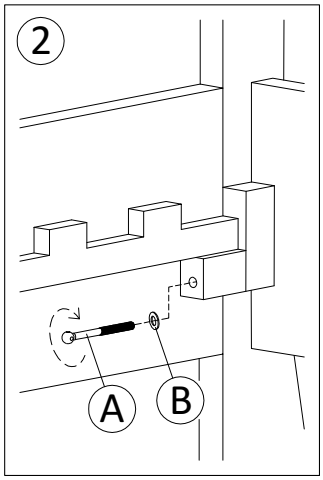

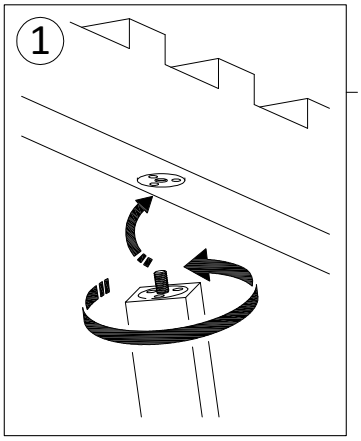

STEP 3

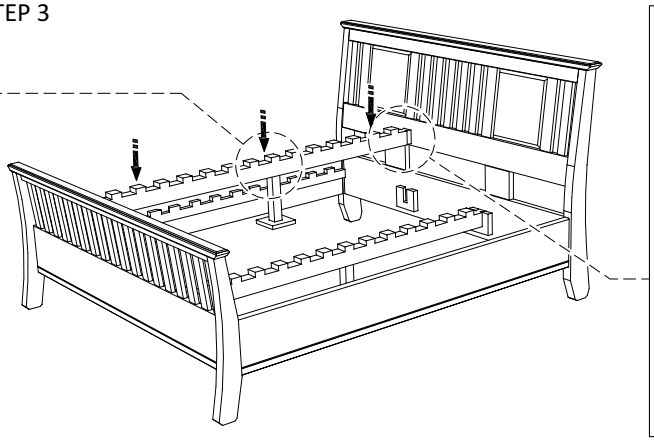

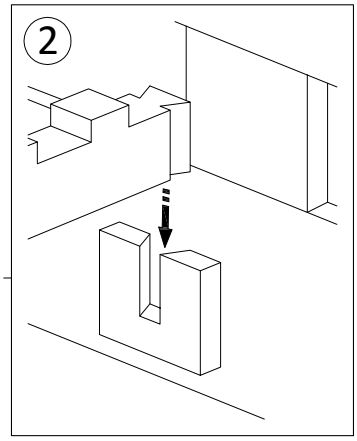

STEP 4

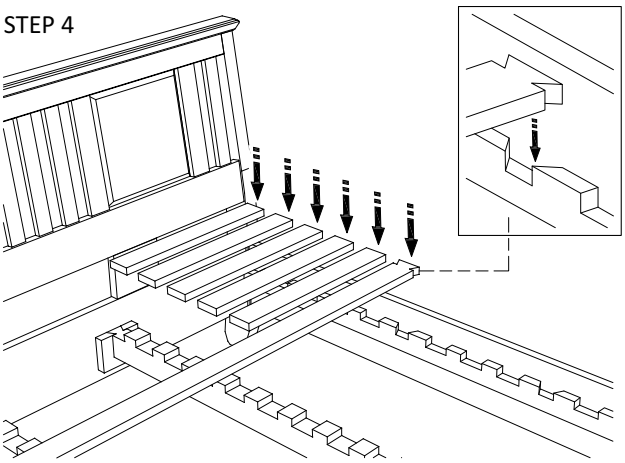

READY

HARDWARE

BED FITTING	WASHER	ALLEN KEY 4
		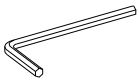
A = M8 x 10cm = 4 pcs	B = Ø10mm = 4 pcs	1 pcs

REMOVE THE SECURING PACKING

STEP 1

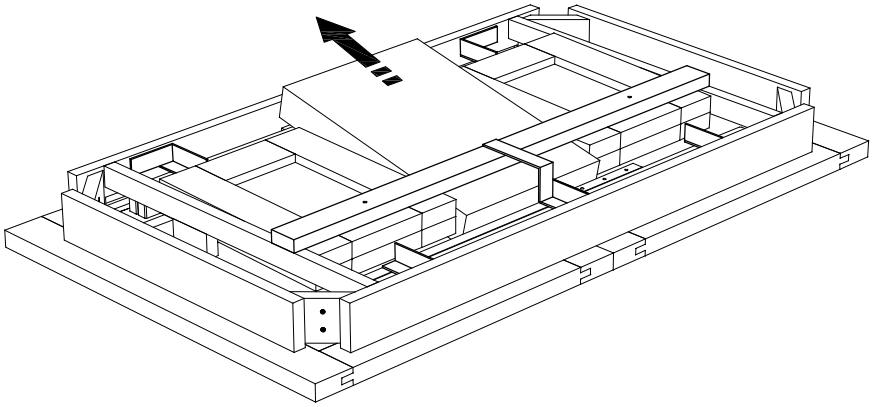

Remove the safety box

STEP 2

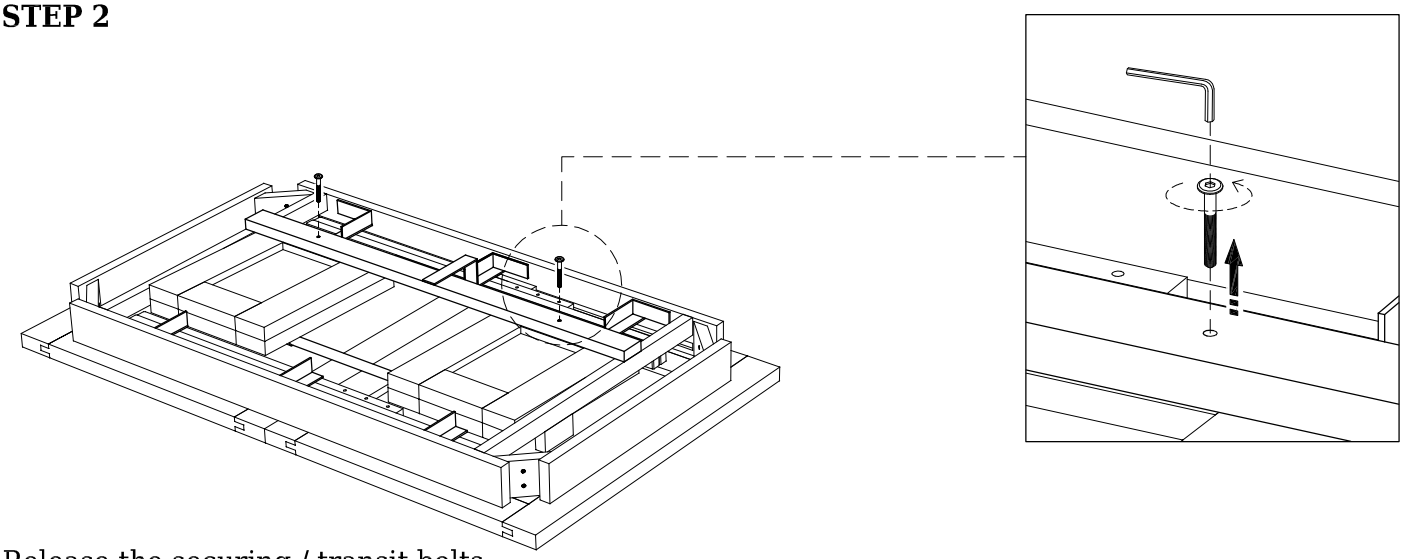

Release the securing / transit bolts

STEP 3

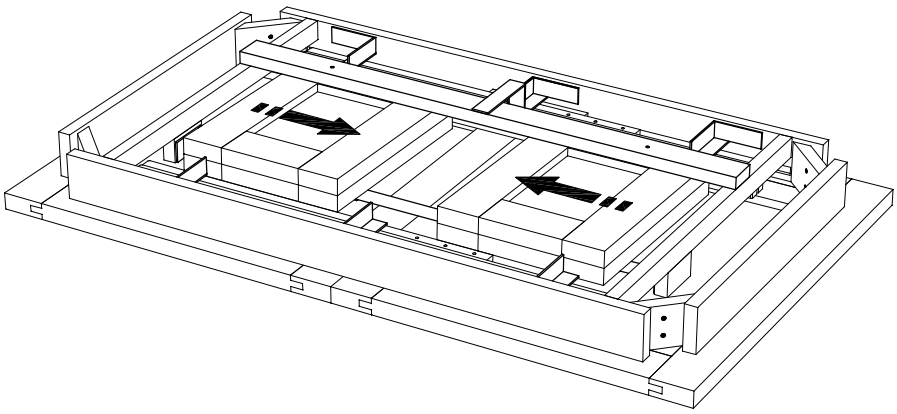

HARDWARE

ALLEN KEY 4

1 pcs

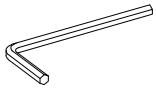

ASSEMBLING INSTRUCTION

Range No	: **MD 027**
Description	: **EXT DINING TABLE 4 LEAF**

STEP 1

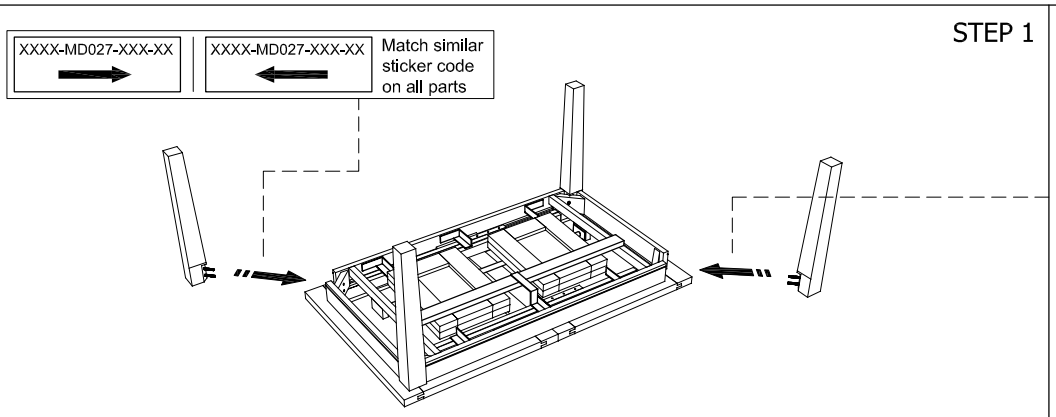

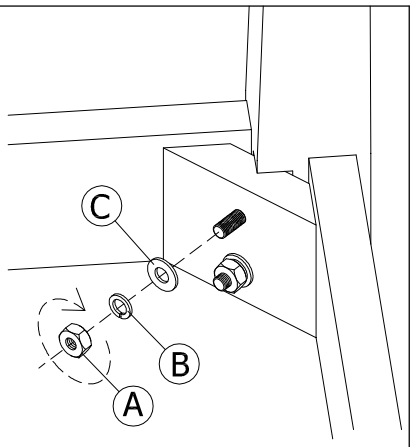

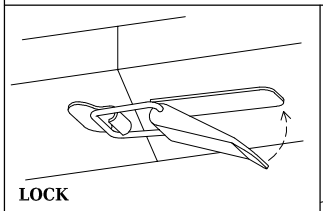

LOCK

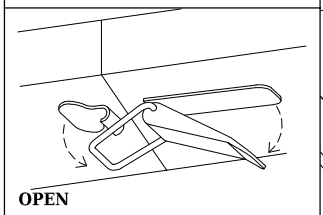

OPEN

USE THIS TABLE CATCH TO SECURE FROM UNWANTED OPENING

STEP 2

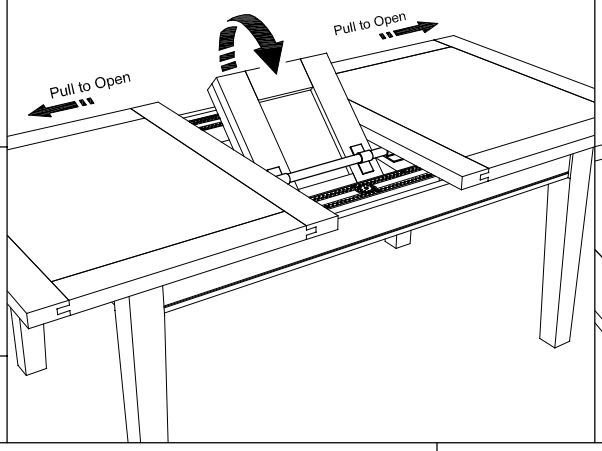

STEP 3

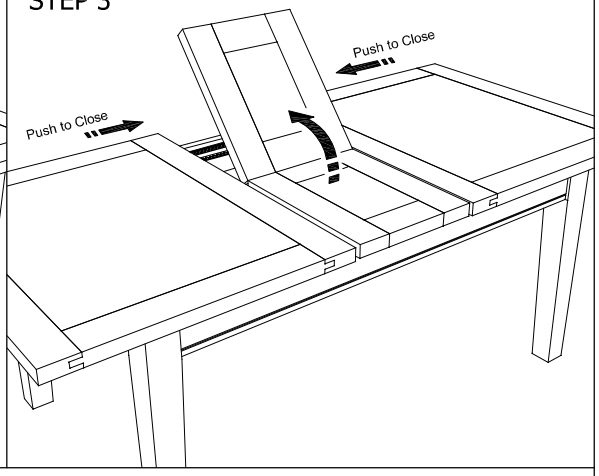

STEP 4

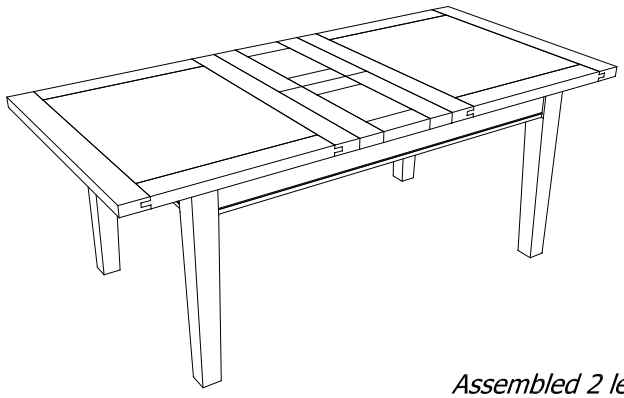

Assembled 2 leaf

STEP 5

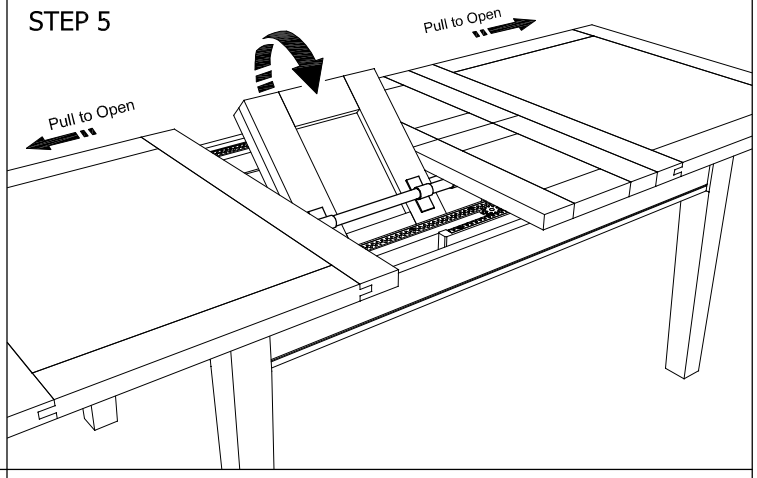

STEP 6

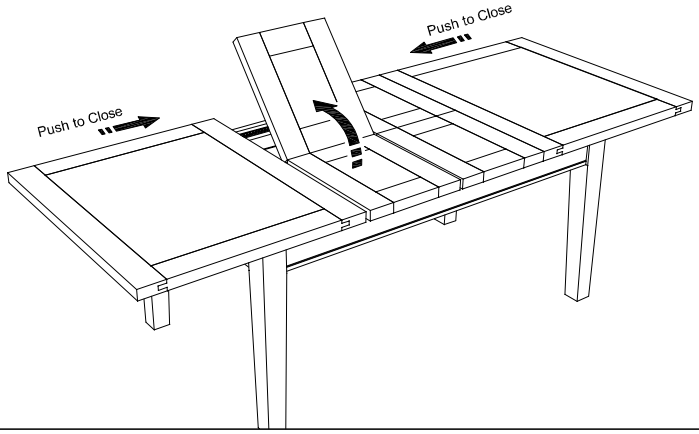

READY

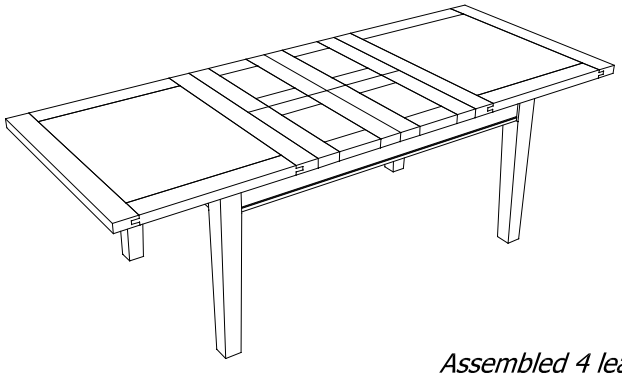

Assembled 4 leaf

HEXAGON NUT A =M10 x 17 = 8 pcs 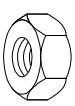	**SPRING WASHER** B =ϕ10mm = 8 pcs 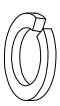	**WASHER** C =ϕ10mm = 8 pcs	**SPANNER 17** 1 pcs 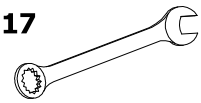

ASSEMBLING INSTRUCTION

Range No	: MD 073
Descriptions	: CROSS LEG ROUND DINING TBL

STEP 1

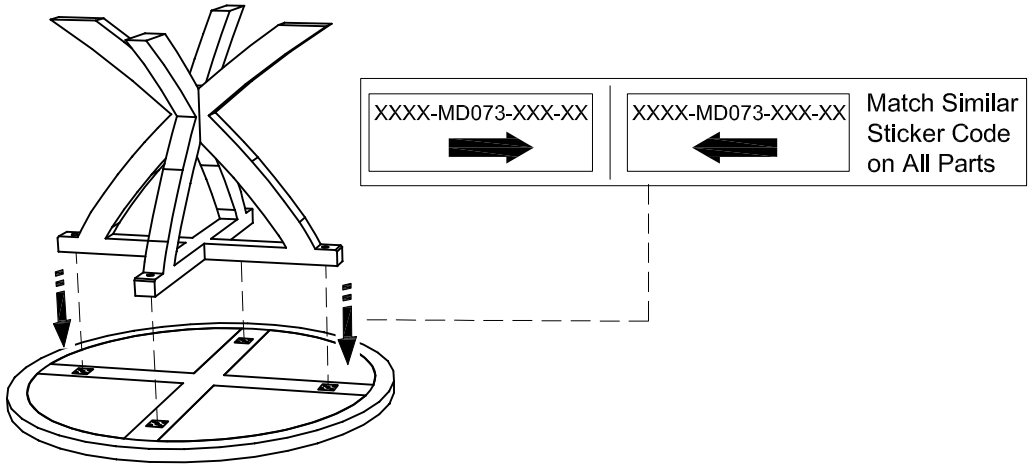

STEP 2

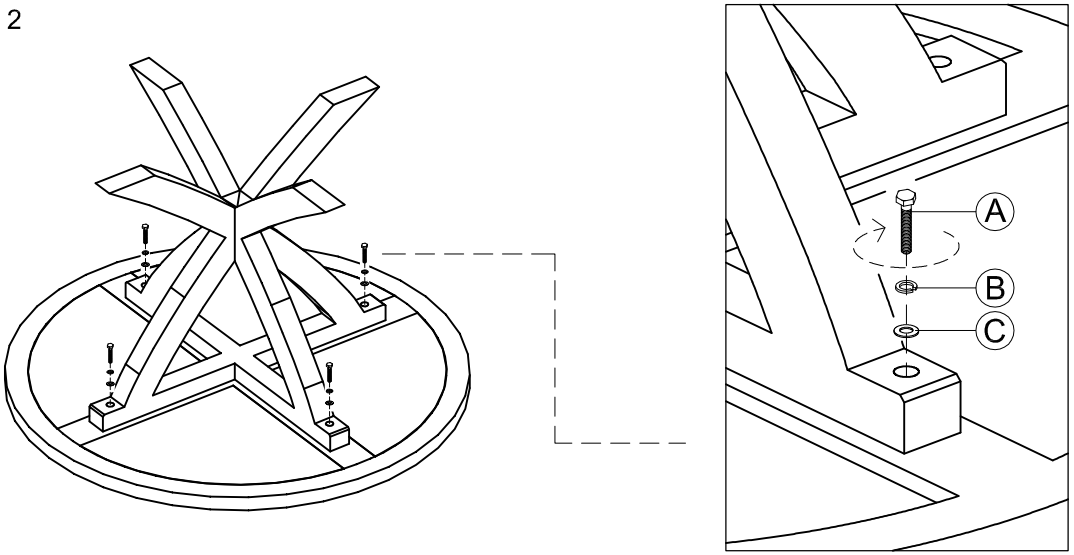

READY

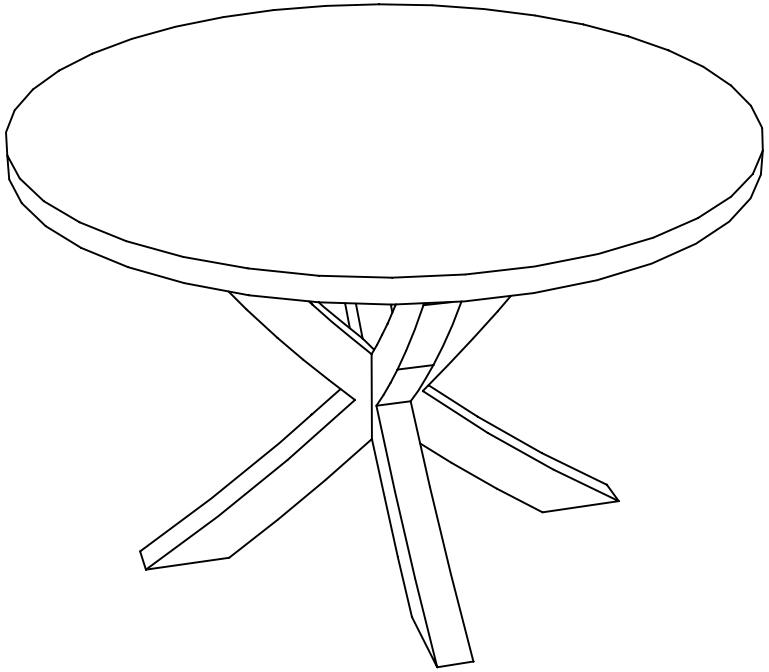

10.08.2016

HARDWARE

HEXAGON BOLT	SPRING WASHER	WASHER	KEY 14
A = M10 x 50mm = 4 pcs	B = Ø10mm = 4 pcs	C = Ø10mm = 4 pcs	

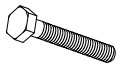

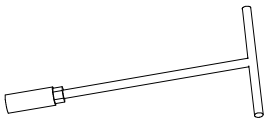

REMOVE THE SECURING PACKING

STEP 1

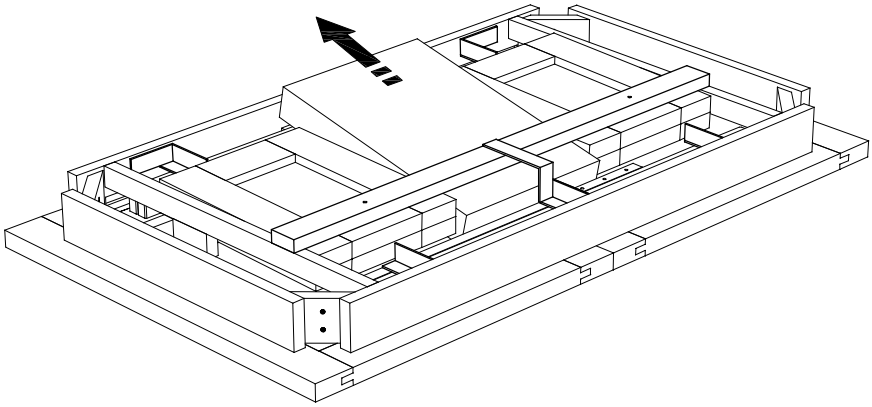

Remove the safety box

STEP 2

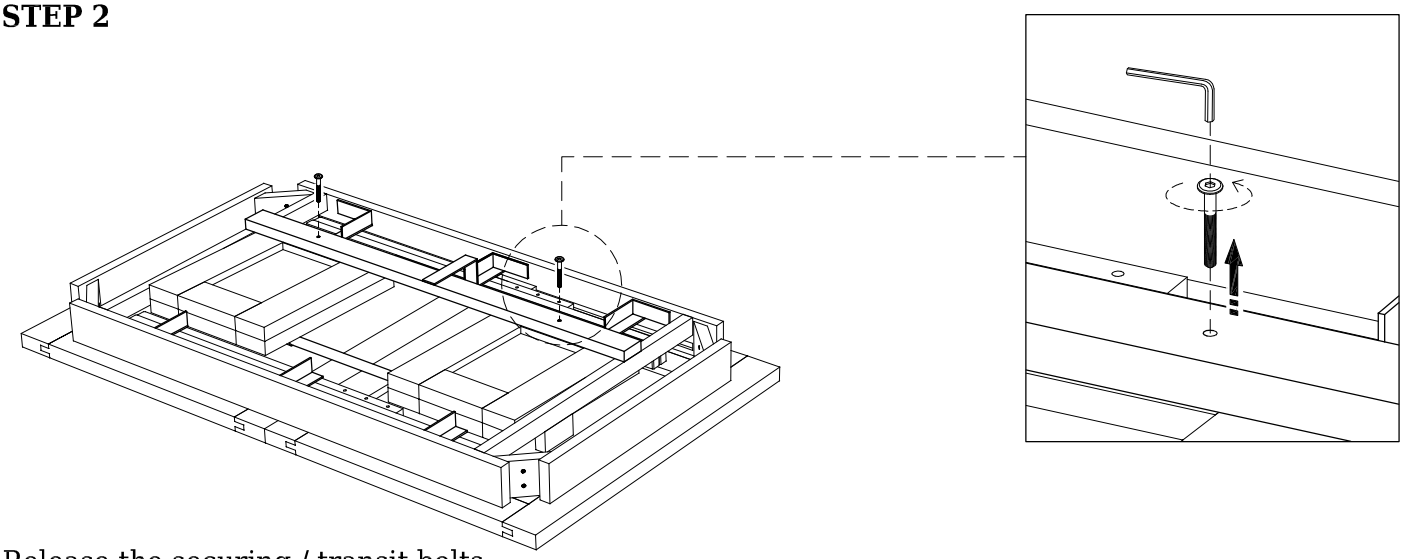

Release the securing / transit bolts

STEP 3

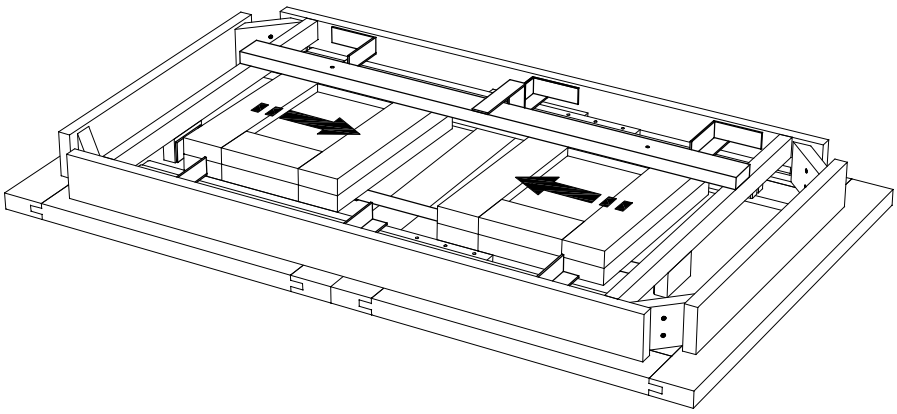

HARDWARE

ALLEN KEY 4

1 pcs

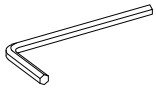

ASSEMBLING INSTRUCTION

Range No	: **MD 077**
Description	: **EXT DINING TABLE 4 LEAF**

STEP 1

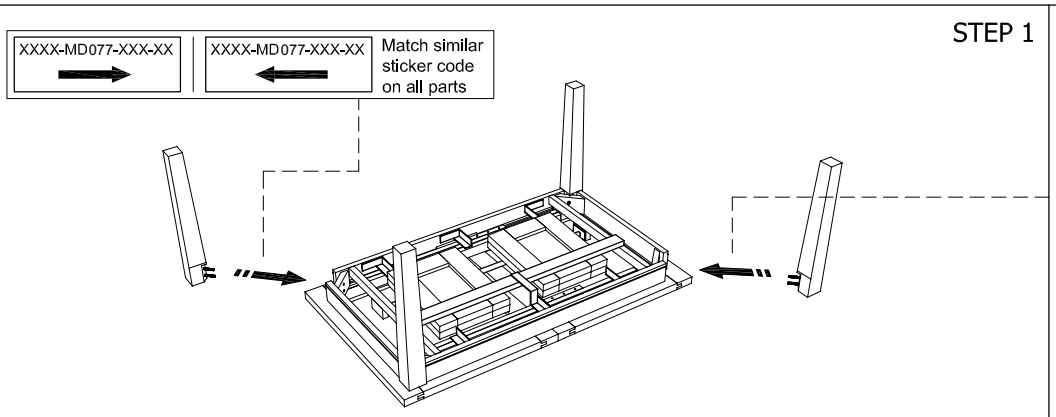

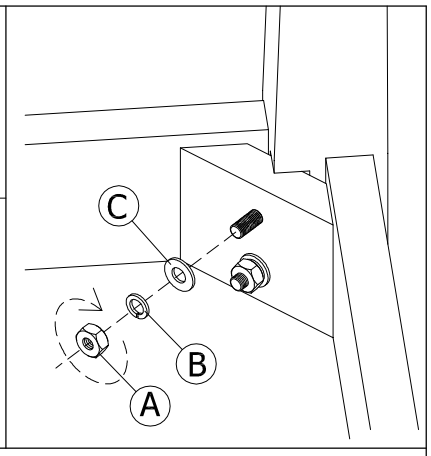

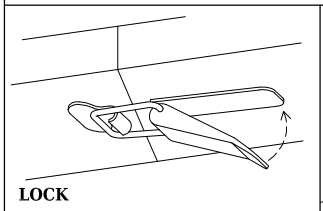

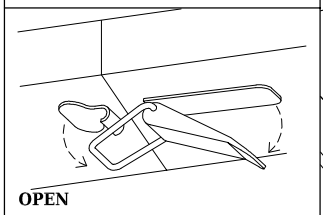

USE THIS TABLE CATCH TO SECURE FROM UNWANTED OPENING

STEP 2

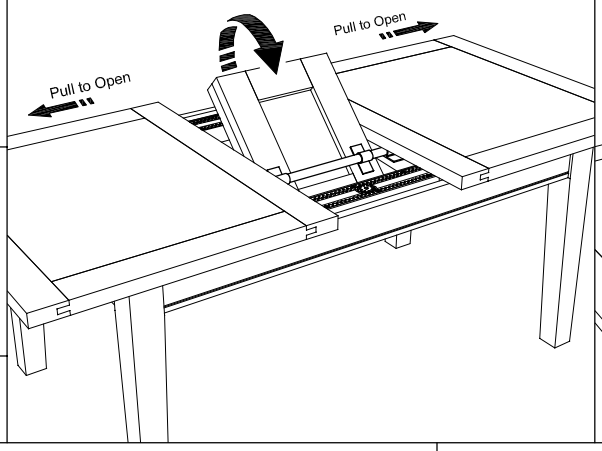

STEP 3

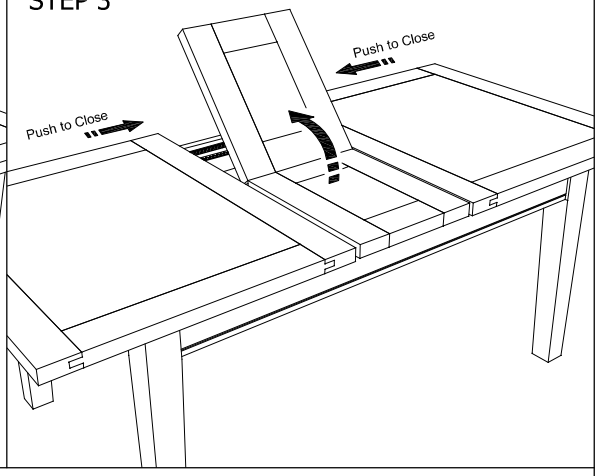

STEP 4

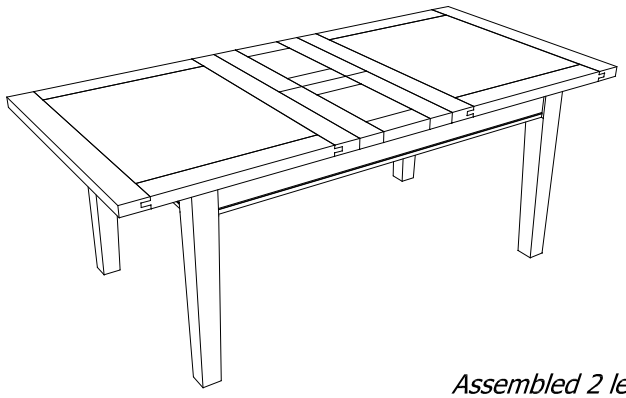

Assembled 2 leaf

STEP 5

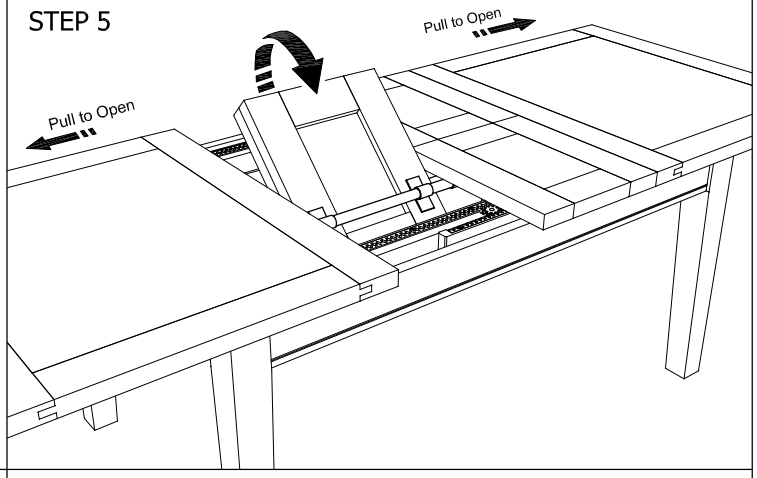

STEP 6

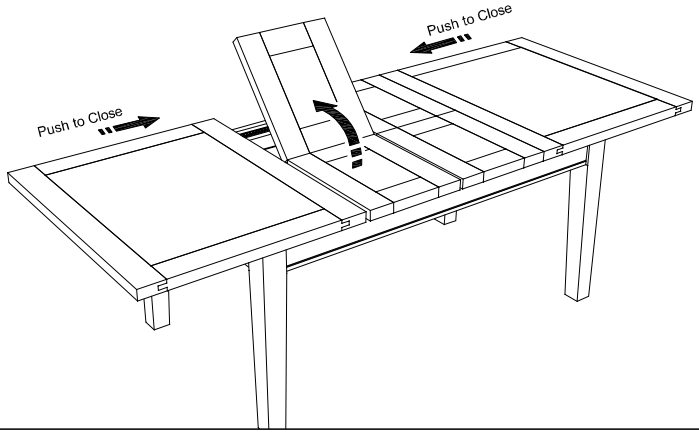

READY

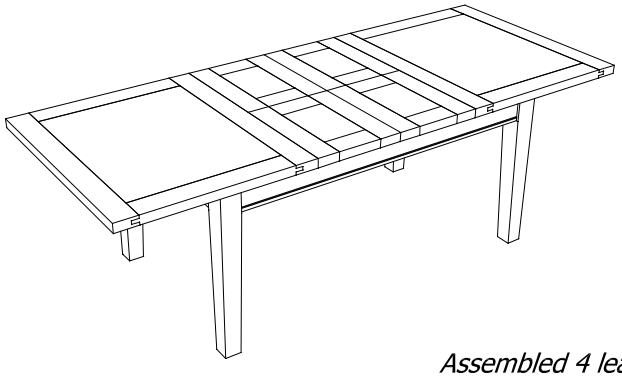

Assembled 4 leaf

HEXAGON NUT A =M10 x 17 = 8 pcs 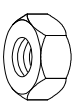	**SPRING WASHER** B =ϕ10mm = 8 pcs 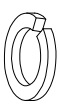	**WASHER** C =ϕ10mm = 8 pcs	**SPANNER 17** 1 pcs 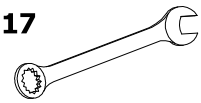

ASSEMBLING INSTRUCTION

Range No	: MD 100
Description	: CONSOLE TABLE

STEP 1

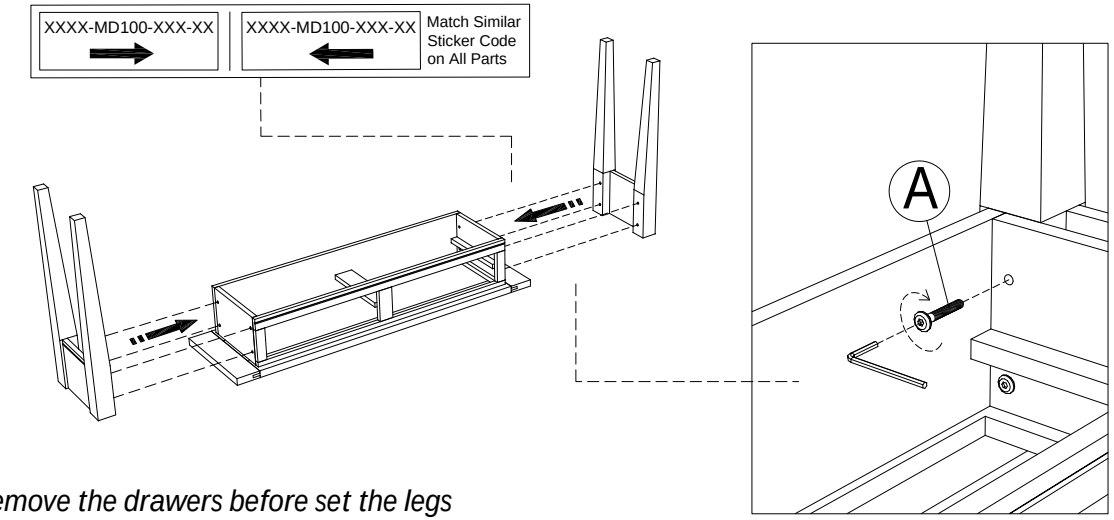

remove the drawers before set the legs

STEP 2

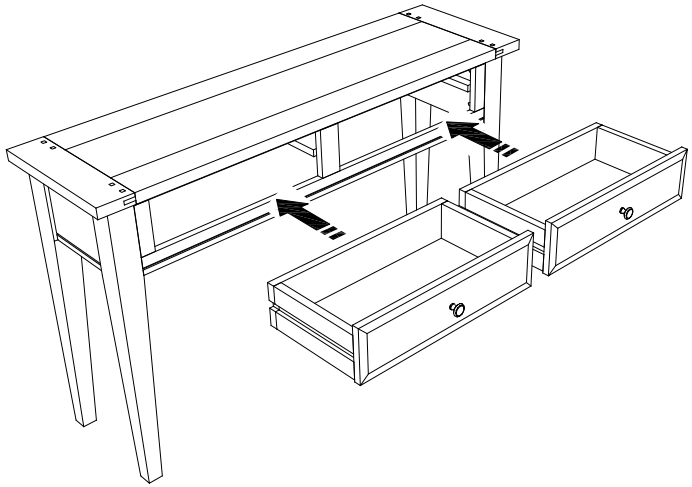

set the drawers

READY

HARDWARE

KD BOLT

A = M6 x 40mm = 8 pcs

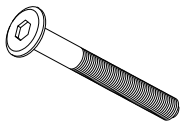

ALLEN KEY 4

1 pcs

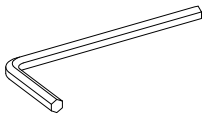

ASSEMBLING INSTRUCTION

Range No	: **MD 101**
Description	: **DINING TABLE**

STEP 1

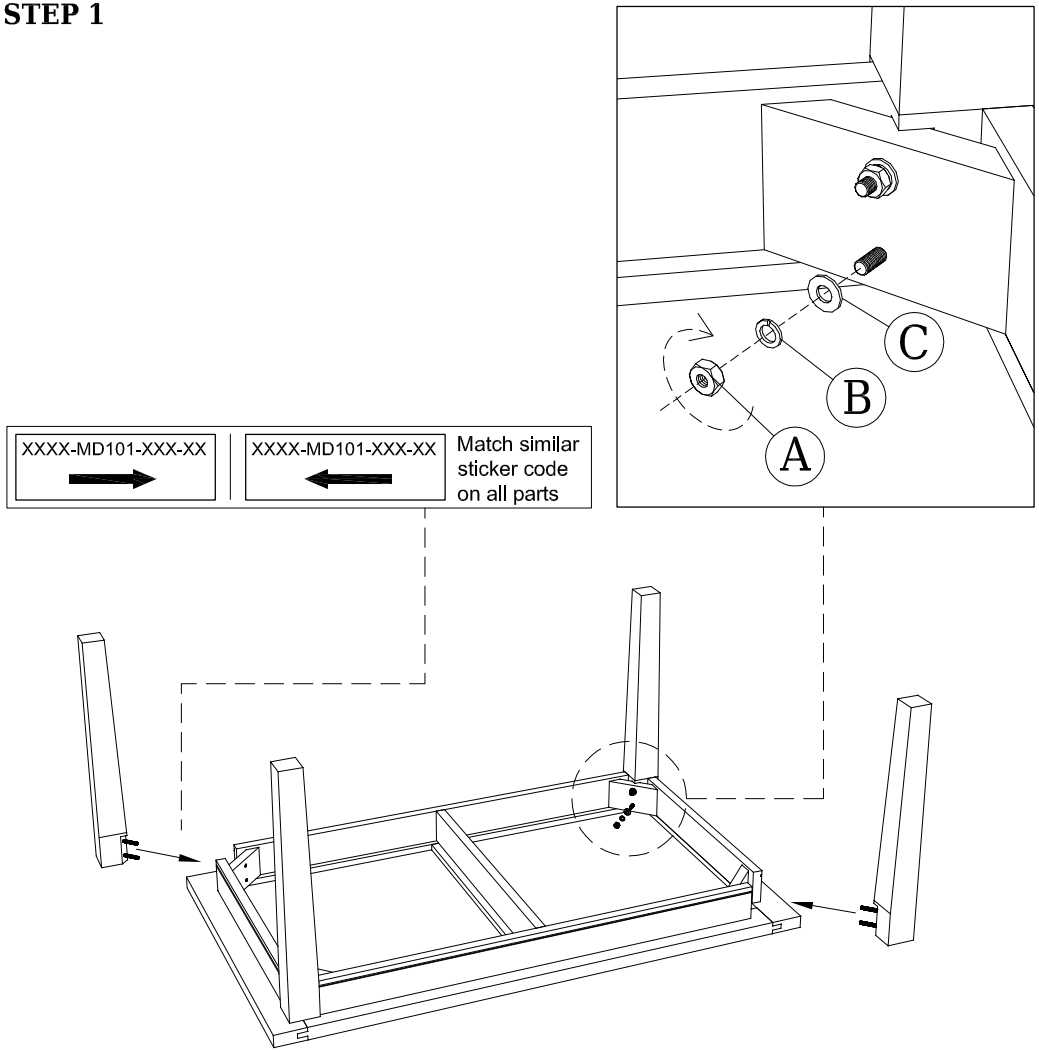

READY

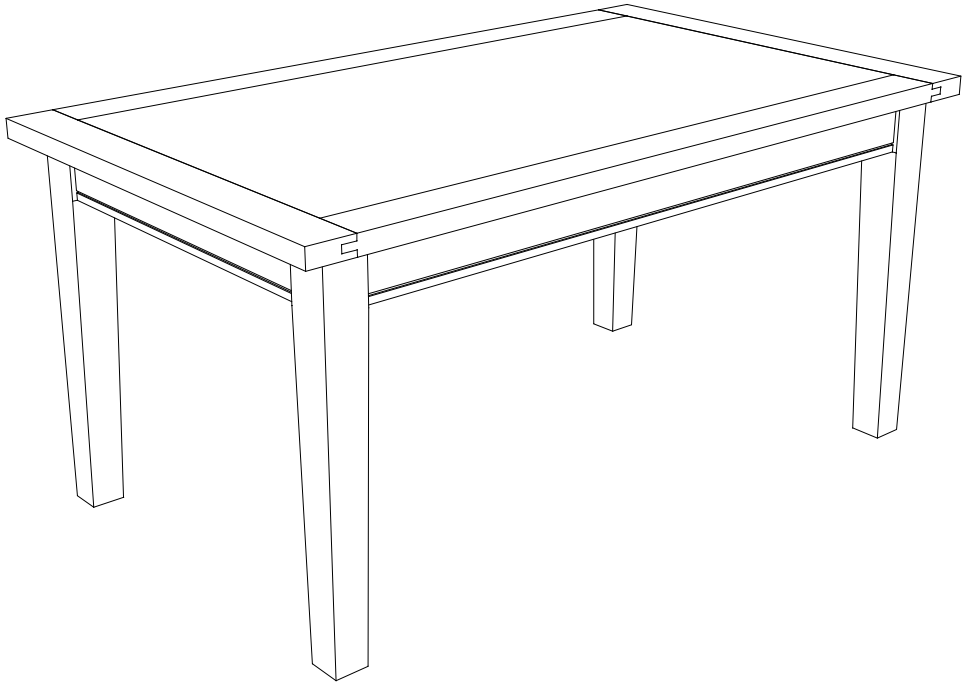

HEXAGON NUT

A = M10 x 17 = 8 pcs

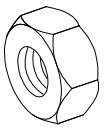

SPRING WASHER

B = Ø10mm = 8 pcs

WASHER

C = Ø10mM = 8 pcs

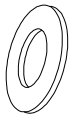

SPANNER 17

1 pcs

ASSEMBLING INSTRUCTION

Range No	: **MD 103**
Description	: **DINING TABLE**

STEP 1

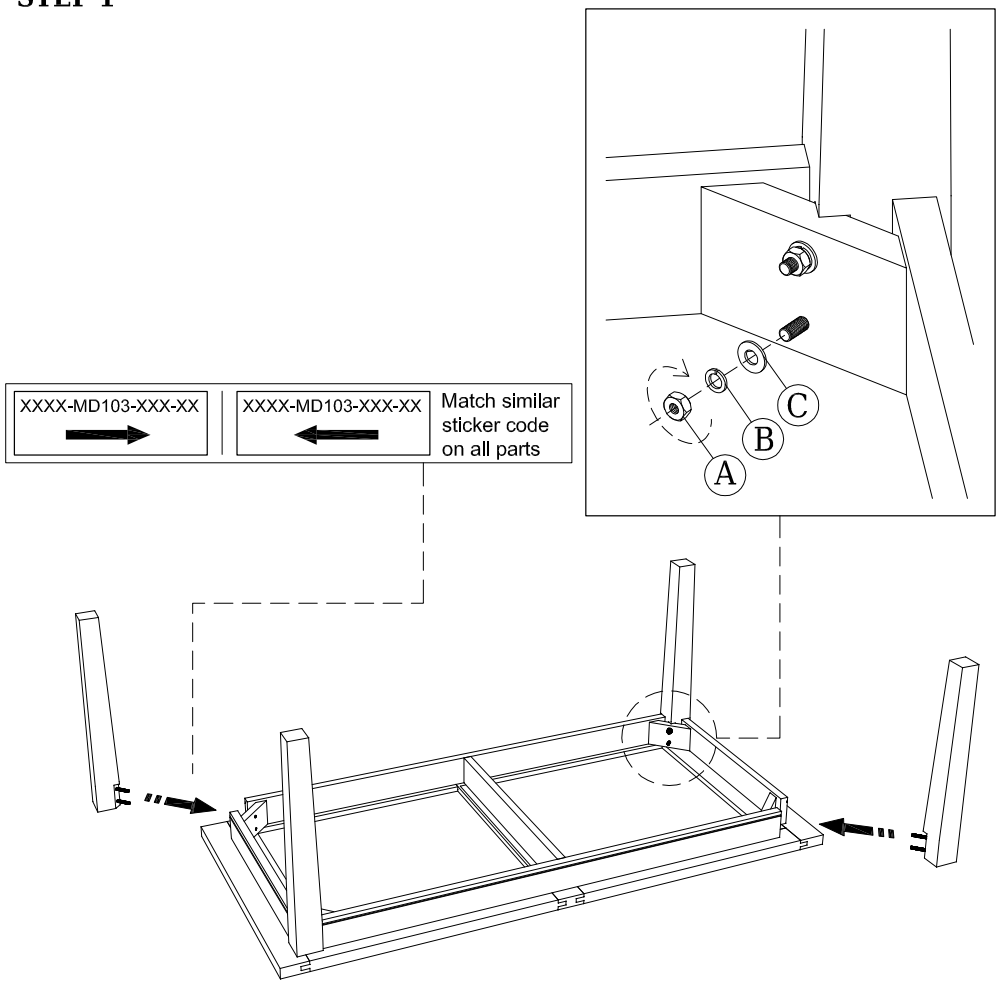

STEP 2

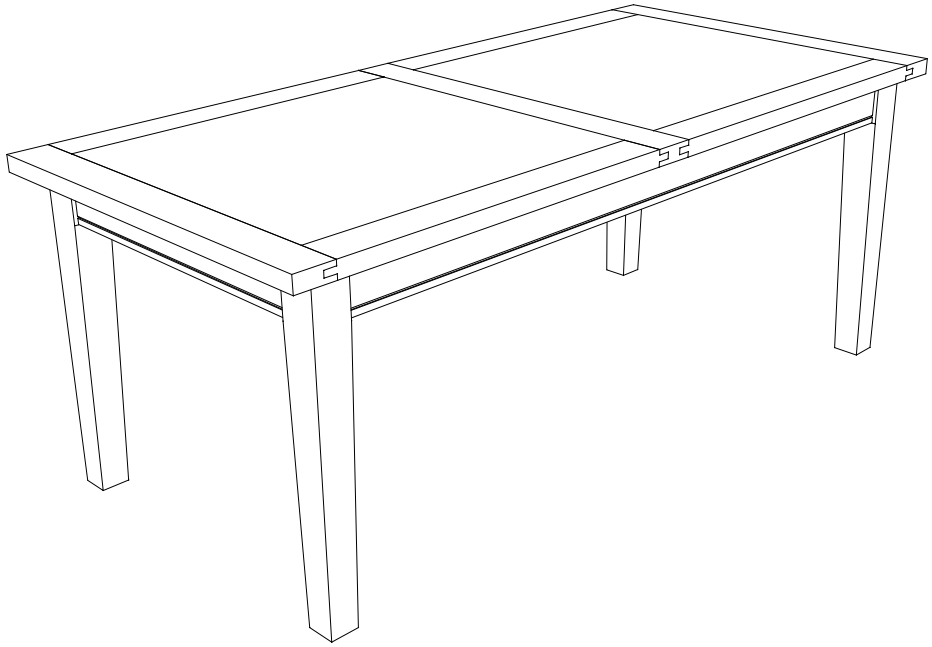

HEXAGON NUT

A = M10 x 17 = 8 pcs

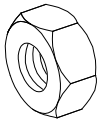

SPRING WASHER

B = Ø10mm = 8 pcs

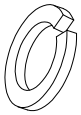

WASHER

C = Ø10mm = 8 pcs

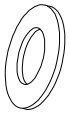

SPANNER 17

1 pcs

ASSEMBLING INSTRUCTION

Range No	: **MD 104**
Description	: **DINING TABLE**

STEP 1

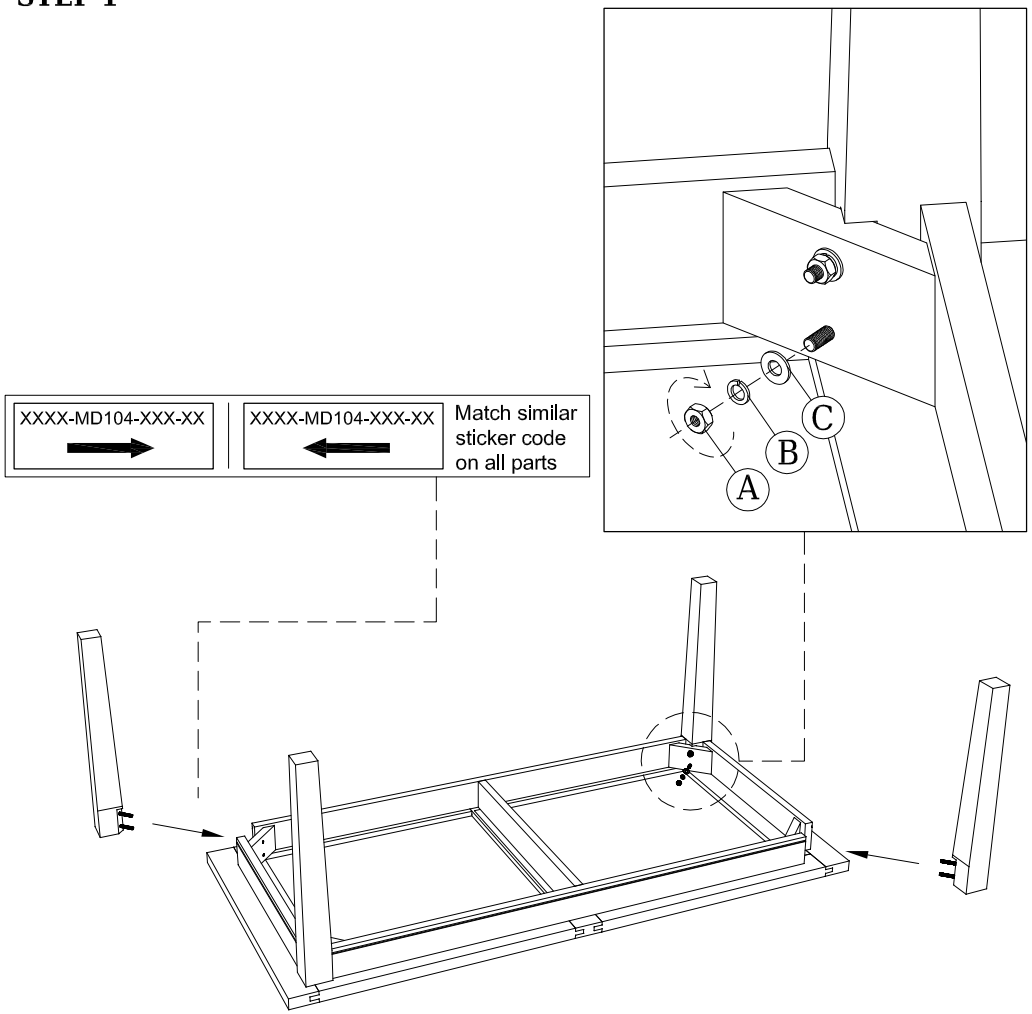

STEP 2

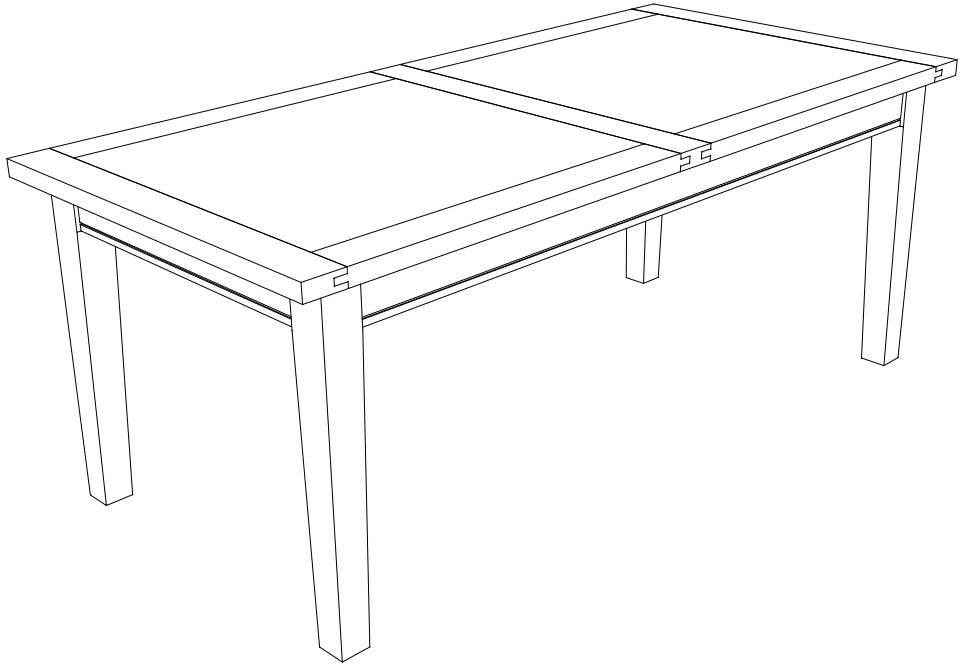

HEXAGON NUT

A = M10 x 17 = 8 pcs

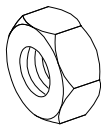

SPRING WASHER

B = Ø10mm = 8 pcs

WASHER

C = Ø10mm = 8 pcs

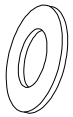

SPANNER 17

1 pcs

ASSEMBLING INSTRUCTION

Range No	: MD 105
Description	: BENCH

STEP 1

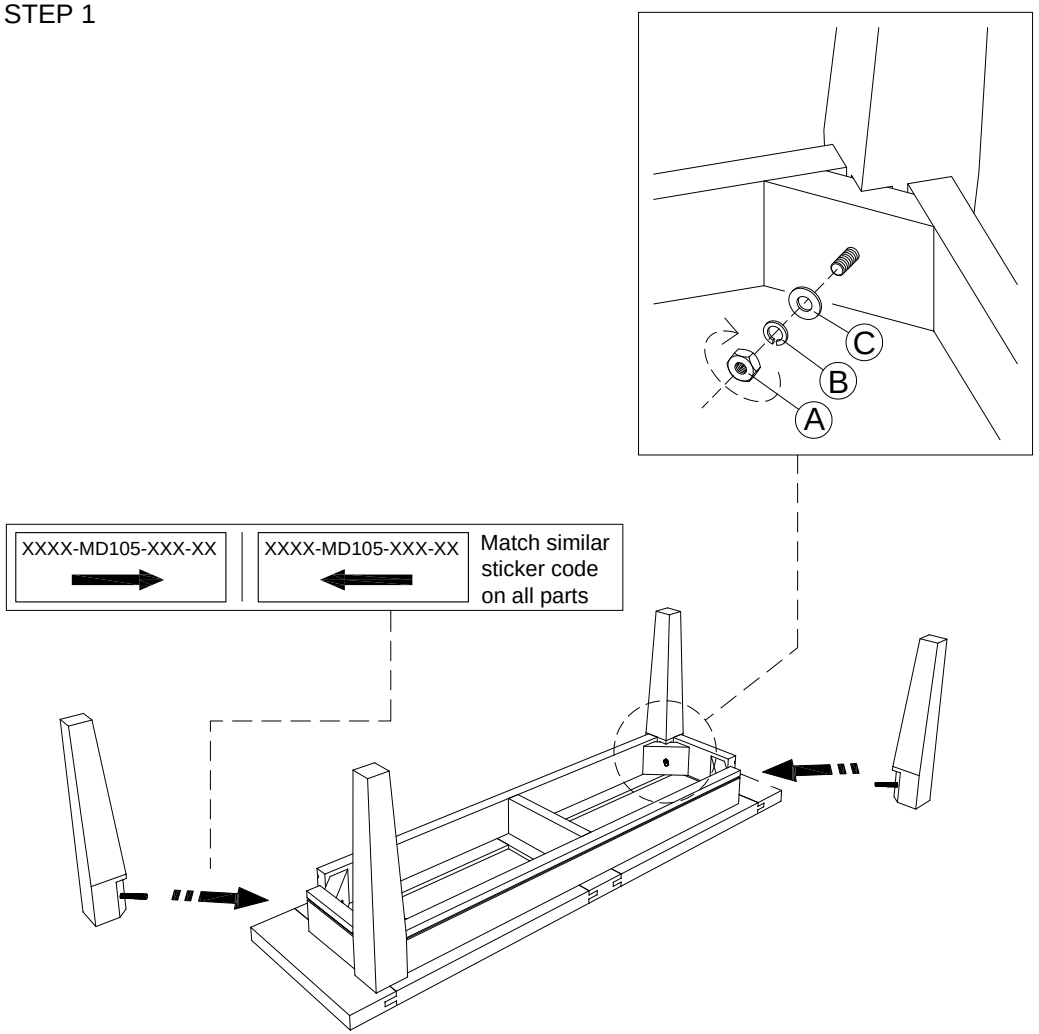

READY

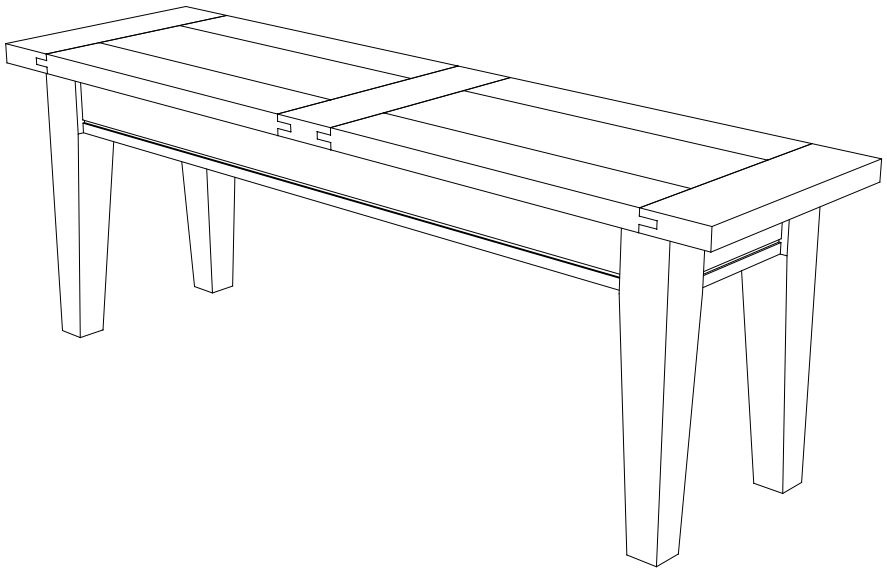

HEXAGON NUT	SPRING WASHER	WASHER	SPANNER 17
A = M10 x 17 = 4 pcs	B = Ø10mm = 4 pcs	C = Ø10mm = 4 pcs	1 pcs

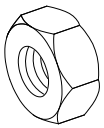
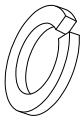
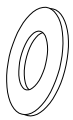
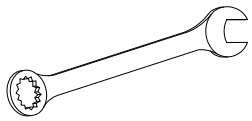

ASSEMBLING INSTRUCTION

Range No	: MD 106
Description	: BENCH

STEP 1

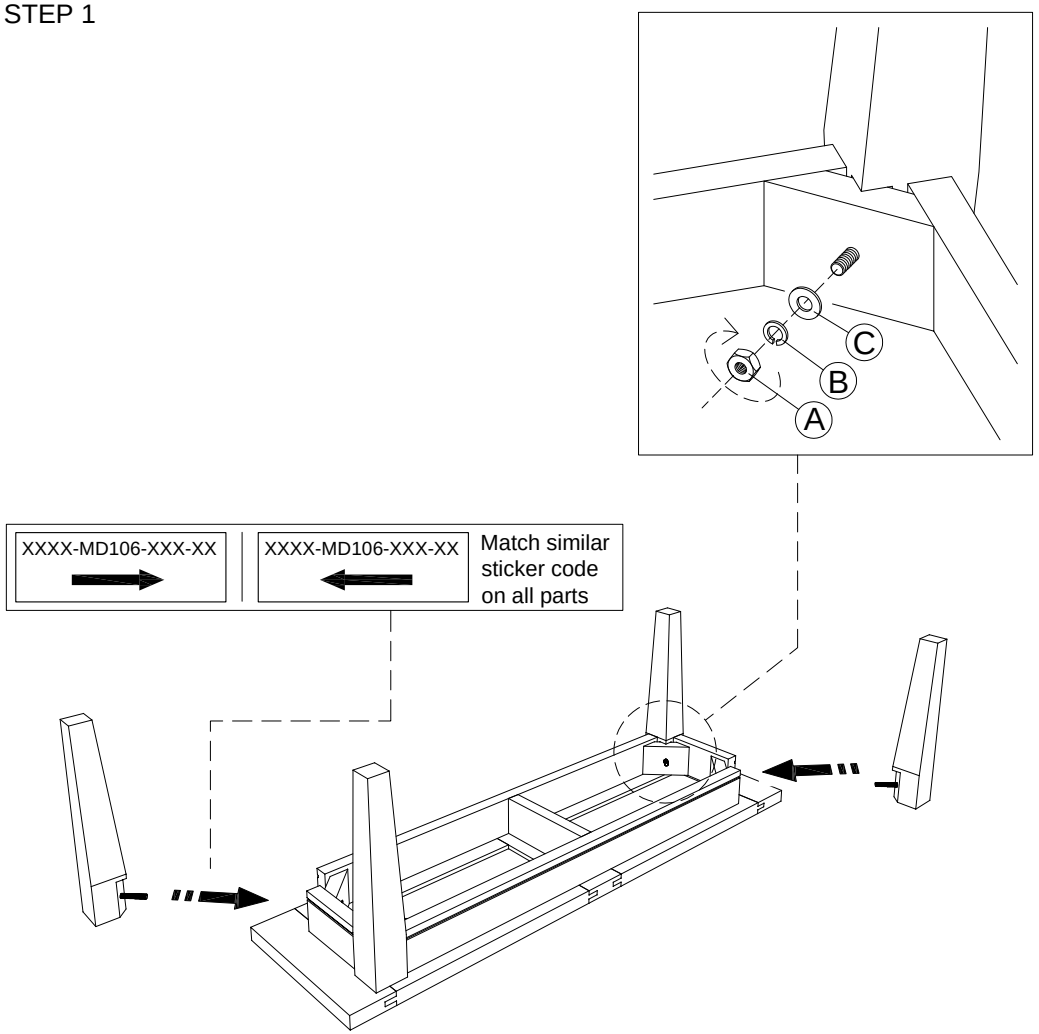

READY

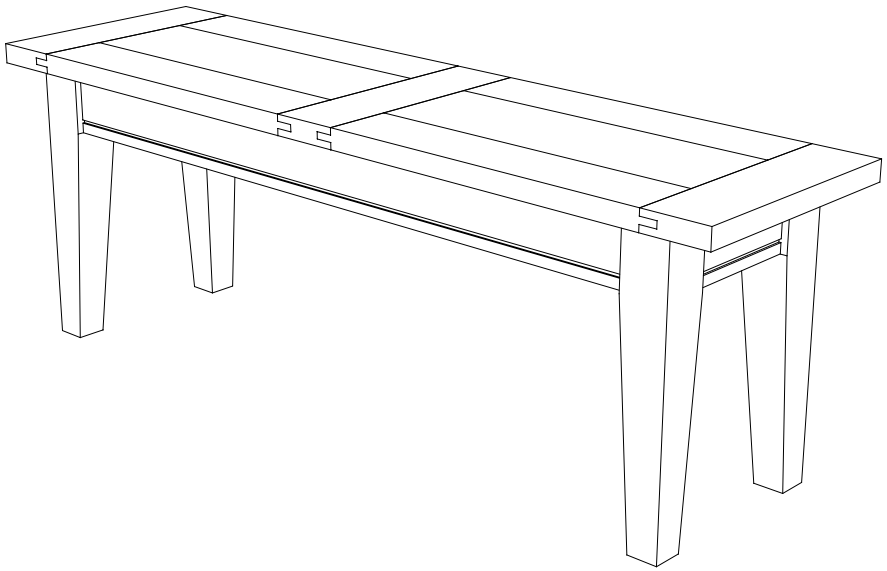

HEXAGON NUT	SPRING WASHER	WASHER	SPANNER 17
A = M10 x 17 = 4 pcs 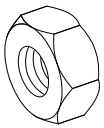	B = Ø10mm = 4 pcs 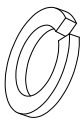	C = Ø10mm = 4 pcs 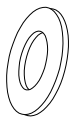	1 pcs 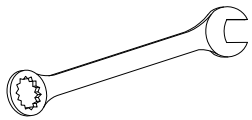

ASSEMBLING INSTRUCTION

Range No	: **MD 110**
Description	: **DESK TABLE 2 DRAWERS**

STEP 1

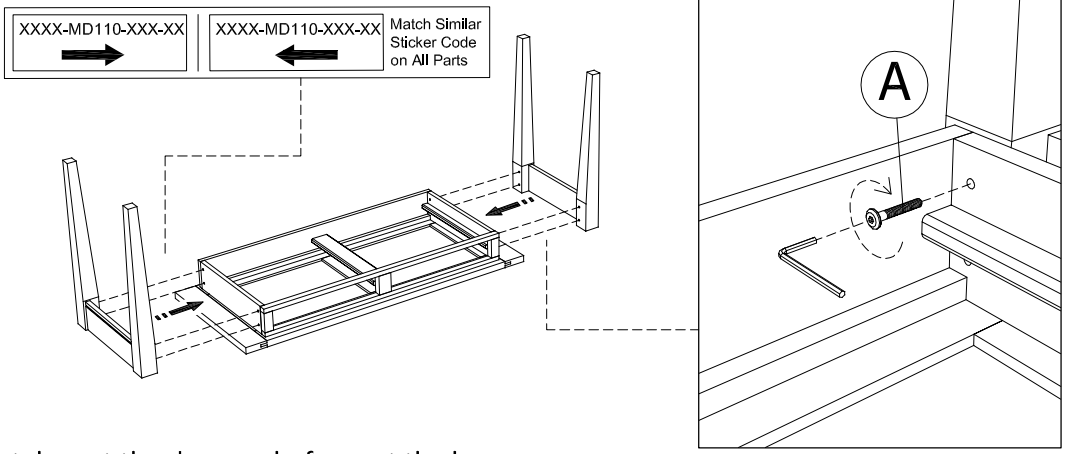

take out the drawers before set the legs

STEP 2

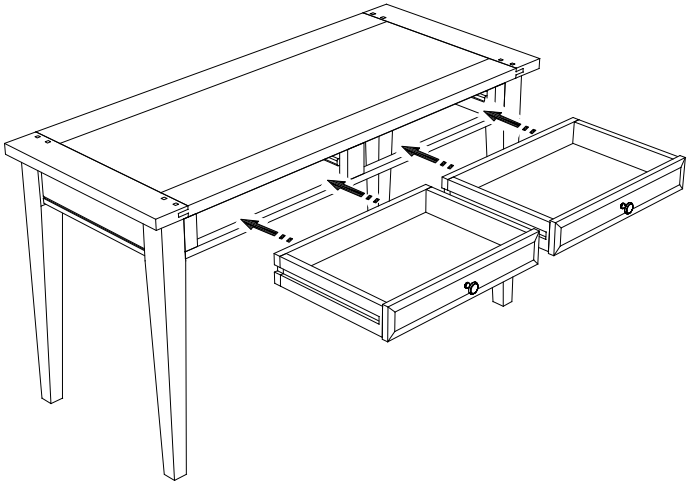

Put in the drawers

READY

HARDWARE

KD BOLT

A = M6 x 40mm = 8 pcs

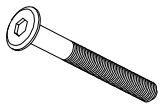

ALLEN KEY 4

1 pcs

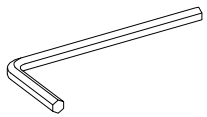

ASSEMBLING INSTRUCTION

Range No	: MD 116
Description	: CONSOLE TABLE

STEP 1

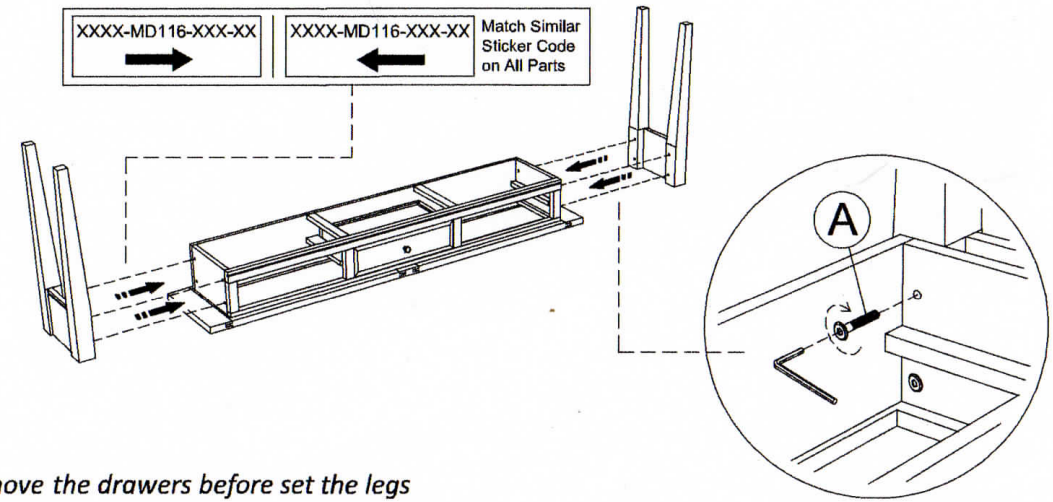

remove the drawers before set the legs

STEP 2

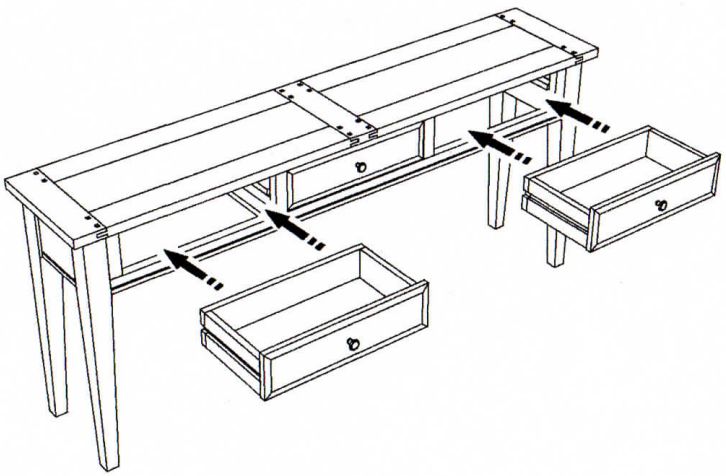

set the drawers

READY

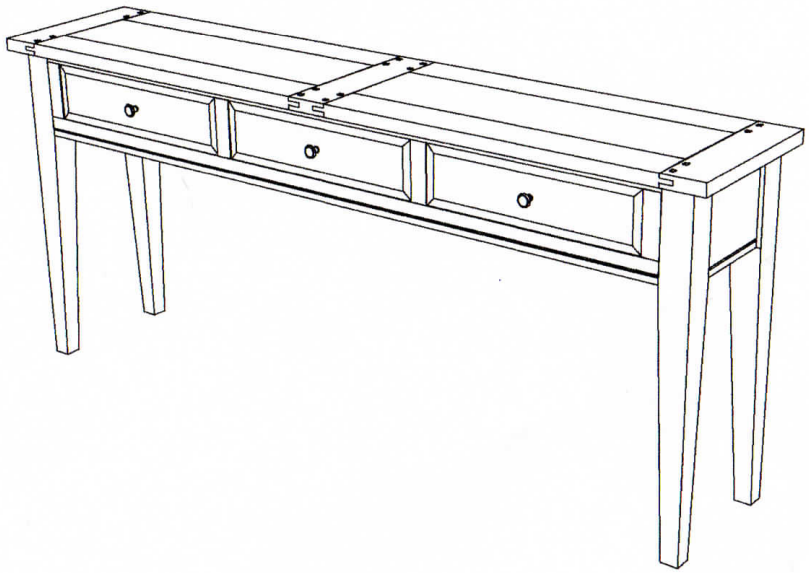

HARDWARE

KD BOLT

A = M6 x 40mm = 8 pcs

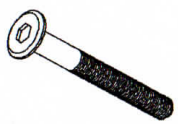

ALLEN KEY 4

1 pcs

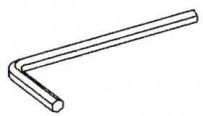

ASSEMBLING INSTRUCTION

Range No	: MD 127
Description	: CROSS LEG ROUND DINING TABLE

STEP 1

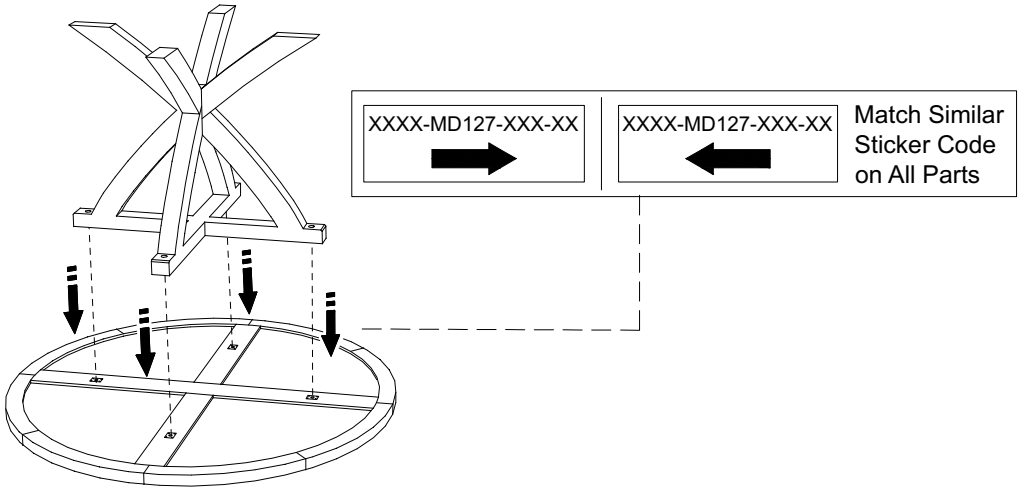

STEP 2

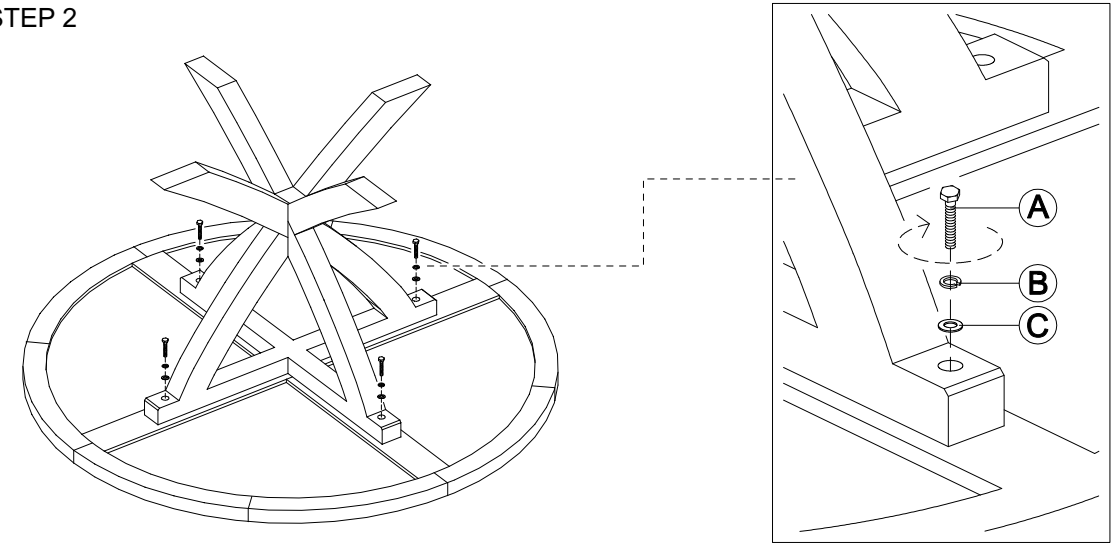

READY

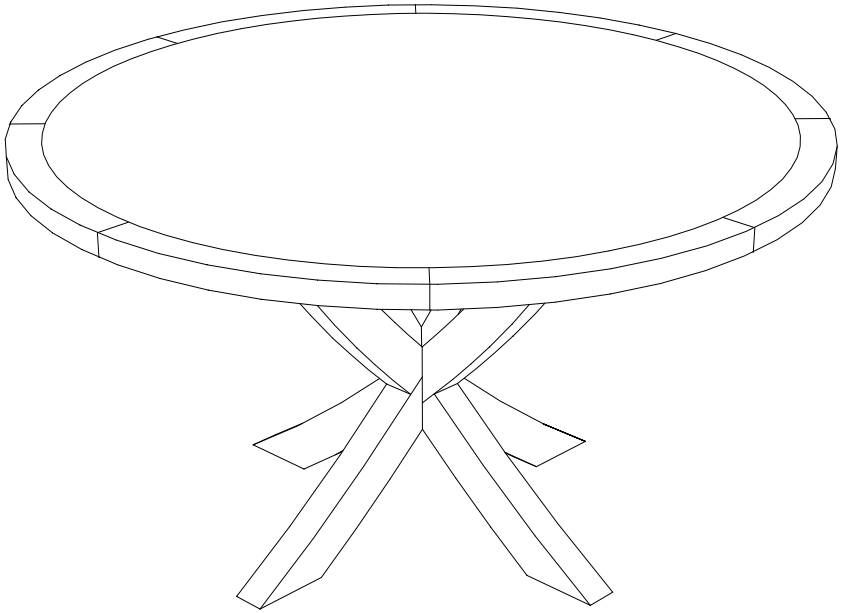

HARDWARE

HEXAGON BOLT

A = M10 x 50mm = 4 pcs

SPRING WASHER

B = Ø10mm = 4 pcs

WASHER

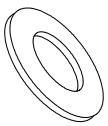

C = Ø10mm = 4 pcs

KEY 14

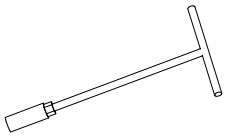

1 pcs

ASSEMBLING INSTRUCTION

Range No	: **MD-133**
Description	: **DESK TABLE 2 DRAWERS**

STEP 1

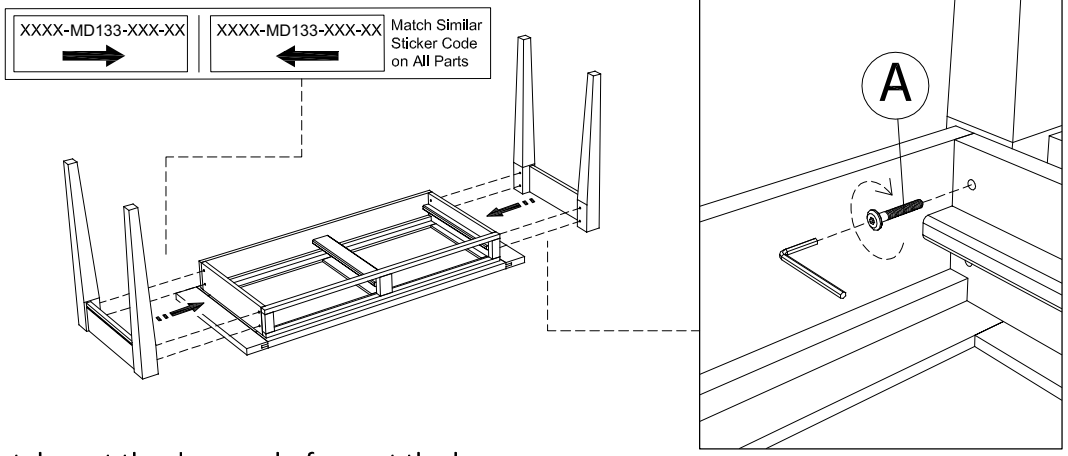

take out the drawers before set the legs

STEP 2

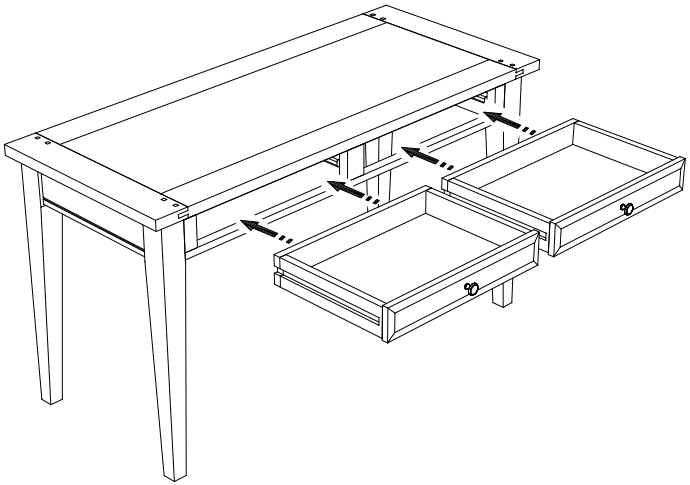

Put in the drawers

READY

HARDWARE

KD BOLT

A = M6 x 40mm = 8 pcs

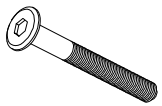

ALLEN KEY 4

1 pcs

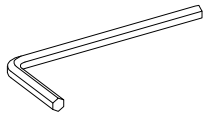

ASSEMBLING INSTRUCTION

Range No : MD136
Descriptions : ROUND EXT DT

STEP 1

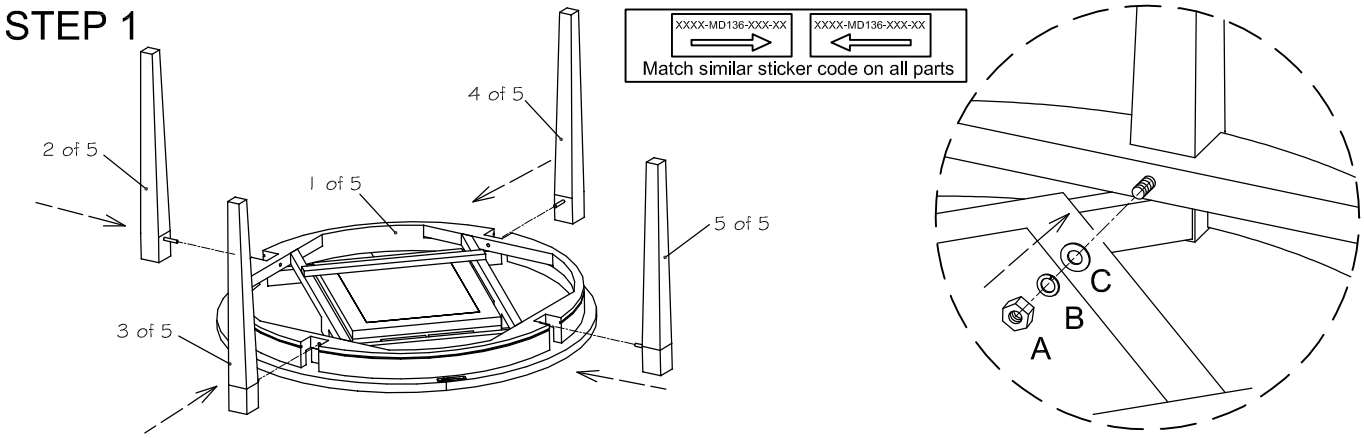

STEP 2

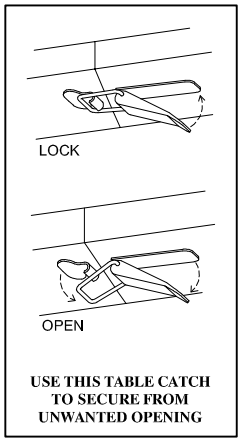

USE THIS TABLE CATCH TO SECURE FROM UNWANTED OPENING

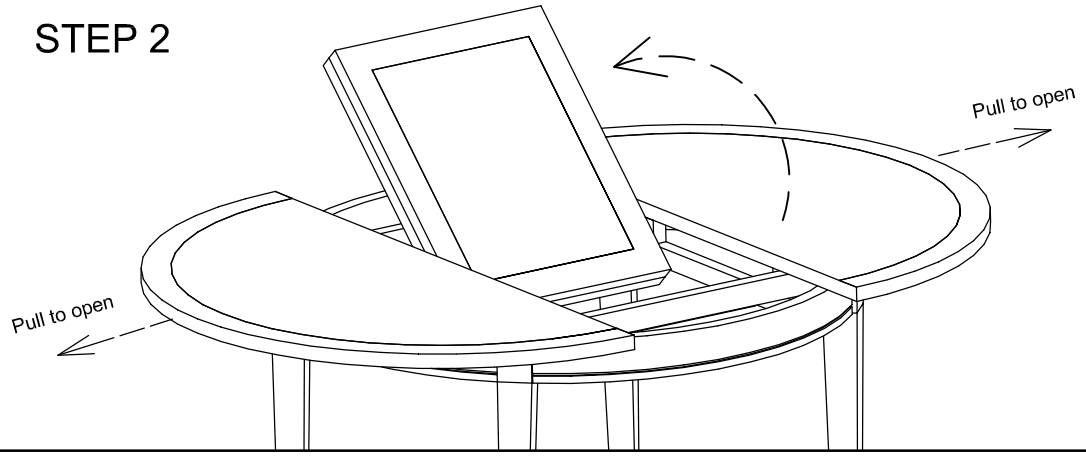

STEP 3

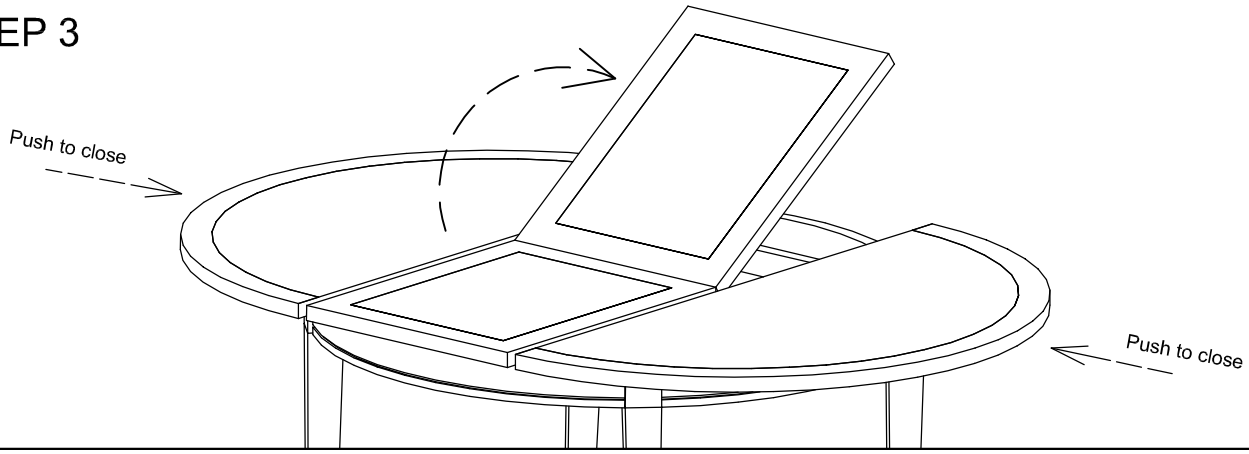

STEP 4

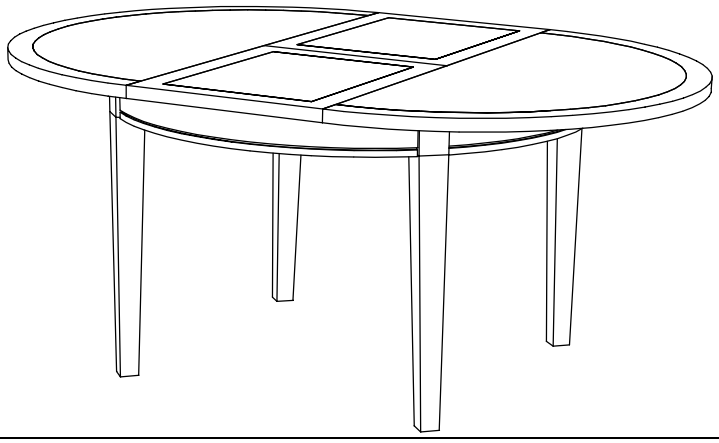

Hardware

A = M10 X 17 = 4 Pcs HEXAGON NUT	B = Ø10 = 4Pcs SPRING WASHER	C = Ø10 = 4 Pcs WASHER	SPANNER 17